HAWAII LED SCREEN™

H.Dot Mesh LED Series

LED Display Dot Lighting

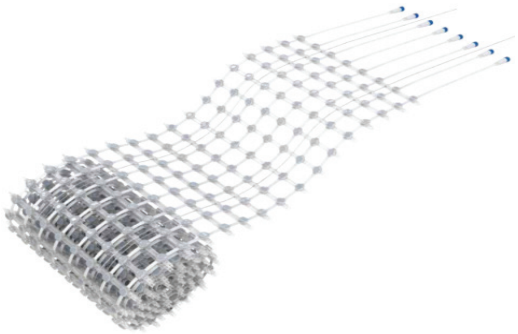



KEY FEATURES

- Thelight-emitting surface is designed with a hemispherical secondary optical structure
- Simpleandelegant, quick and convenient to install
- Hiddenstructural design of wire rope fixation
- Realize16ports to output power supply and signal at one end
- Productweight per unit is 0.01KG, 4KG per square

PRODUCT SIZE

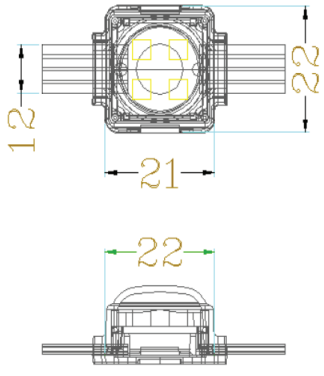

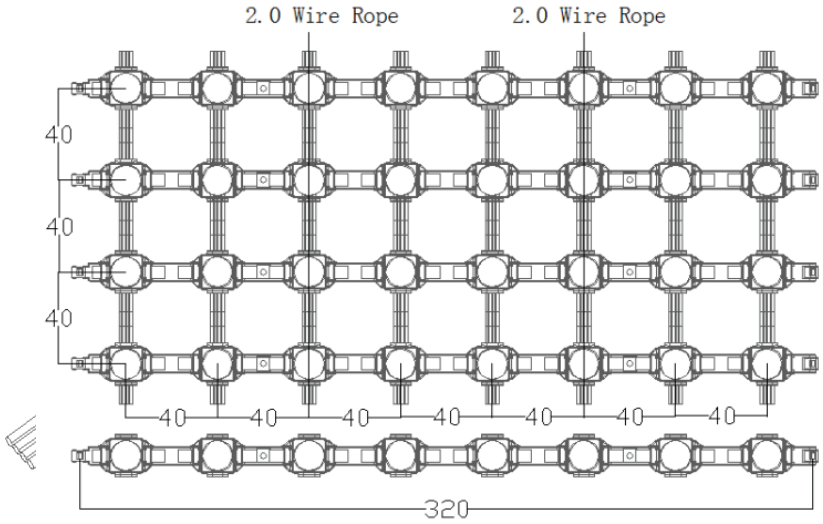

HAWAII™ LED SCREEN

H.Dot Mesh LED Series

SPECIFICATIONS

Item	GDot-40
LED Configuration	SMD 6 in 1
Pixel Pitch (mm)	40
Power Consumption	1.44 W/dot
Power input	AC110-240V 50/60Hz
Working voltage	DC-24V
Net Weight (kg)	5.8kg/m²
Pixel Density (Point/m²)	576 dots/m²
Brightness (nits)	6000
Viewing Angle (H/V) °	120/120
Pixel combination	6R6G6B (6lights/points)
Gray Scale (Bit)	14-16bits high-brightness
Light Sourei LiFe	40000hrs
Power Consumption Max (W/m²)	829
Power Consumption Avg (W/m²)	276
IP rate	IP67
Refresh Rate @60Hz	3840
Operating Temperature (°C)	-20 -- 60
Storage Temperature (°C)	-20 -- 60
Operating Humidity (RH)	10 -- 85% no condensation
Storage Humidity (RH)	10 -- 90% no condensation
Installation	Front/Rear
Maintenance (Module, Powersupply, Receiving card)	Front